Innsbruck

SC-7800~SC-7811

Our Innsbruck fixtures are very striking pendants and sconces with a predominant curled "fin" as a series trademark. We make Innsbruck in a variety of metal types and finishes. We show a true antique bronze in the sconce photo, but satin stainless steel is available and can be used for dramatic wet location mounting opportunities. Not sure if there are hidden meanings in this design, but it seems to fit into places that are difficult to blend into. The bowl acrylics can be anything from beige alabaster to pure white. And lamping options range from incandescent to LED.

~Innsbruck Series~

- Chandelier: CH-7800~CH-7811
- Pendant: PD-7800~PD-7831
- Ceiling Mount: CL-7800~CL-7808
- Wall Mount: SC-7800~SC-7811
- Bollard: BL-7800~BL-7811

Mounting: Lightsmith fixtures mount to standard 4" octagon electrical boxes unless otherwise specified. All hardware and canopies supplied.

Listing and Warranty: Lightsmith fixtures are Underwriters Laboratories listed and carry a standard three year warranty against defects in materials and labor beginning at date of shipment.

MADE IN USA

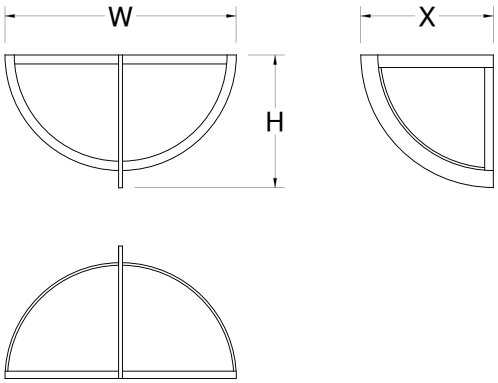

Bottom View

SC-78__ Fixture Number

Job Type

Job Name

Notes~Modifications

	Fixture Number	Dimensions	Lamping	Weight	Options
LED	☐ SC-7809	16w x 7h x 4x*	2-13wLLED (2820 lumens)	6 lbs	L211,TPL,WLM
LED	☐ SC-7810	20w x 9h x 10x	3-13wLLED (4230 lumens)	8 lbs	L213,IEM,TPL,WLM
LED	☐ SC-7811	24w x 11h x 12x	4-13wLLED (5640 lumens)	10 lbs	L223,IEM,TPL,WLM DALI,REM,FUS**
INCANDESCENT	☐ SC-7800	16w x 7h x 4x*	2-60wA (1600 lumens)	3 lbs	TPL,WLM
INCANDESCENT	☐ SC-7801	20w x 9h x 10x	3-60wA (2400 lumens)	5 lbs	TPL,WLM
INCANDESCENT	☐ SC-7802	24w x 11h x 12x	4-60wA (3200 lumens)	7 lbs	TPL,WLM
FLUORESCENT	☐ SC-7803	16w x 7h x 4x*	2-18wCFQ (2400 lumens)	5 lbs	L211,TPL,WLM
FLUORESCENT	☐ SC-7804	20w x 9h x 10x	2-32wCFT (4800 lumens)	7 lbs	L213,IEM,TPL,WLM
FLUORESCENT	☐ SC-7805	24w x 11h x 12x	2-42wCFT (6400 lumens)	9 lbs	L223,IEM,TPL,WLM DIM,REM,FUS*

*ADA Fixture ~Single Circuit Standard Wiring~ *All Fluorescent Fixtures **All LED Fixtures

DIFFUSER

- ☐ **BGA:** Beige Alabaster Acrylic
- ☐ **NHA:** Natural Horn Acrylic
- ☐ **WHA:** White Alabaster Acrylic
- ☐ **HNA:** Honey Alabaster Acrylic
- ☐ **WOA:** White Opal Acrylic
- ☐ **GRA:** Green Edge Acrylic
- ☐ **EGA:** Earth Green Acrylic
- ☐ **DGA:** Deep Gold Acrylic
- ☐ **SBA:** Sea Blue Acrylic
- ☐ **PHA:** Purple Haze Acrylic
- ☐ **ECH:** Etched*

**Etched option creates a matte, non-glossy finish on one side of the diffuser. (Example:WOA-ECH)*

METAL FINISH

SOLID BRASS FINISHES	PAINTED METAL FINISHES	ALUMINUM FINISHES	STAINLESS STEEL FINISHES
☐ **ABB:** Antique Brass	☐ **DGP:** Dark Green	☐ **SAA:** Satin Aluminum	☐ **SSS:** Satin
☐ **SBB:** Satin Brass	☐ **VGP:** Verde Green	☐ **SNA:** Satin Nickel	☐ **DSS:** Distressed
☐ **PBB:** Polished Brass	☐ **CGP:** Charcoal Gray	☐ **PAA:** Polished Aluminum	☐ **PSS:** Polished
☐ **ANB:** Antique Nickel	☐ **MBP:** Medium Bronze	☐ **BBA:** Burnished Bronze	☐ **HSS:** Hammered
☐ **SNB:** Satin Nickel	☐ **SBP:** Satin Black	☐ **RNA:** Red Naval Bronze	☐
☐ **PNB:** Polished Nickel	☐ **DBP:** Dark Bronze	☐ **SGA:** Satin Gold	☐
☐ **AZB:** Antique Bronze	☐ **LBP:** Light Bronze	☐ **SBA:** Satin Bronze	☐
☐ **SZB:** Satin Bronze	☐ **MGP:** Medium Gold	☐ **ORA:** Oil Rubbed Bronze	☐
☐ **PZB:** Polished Bronze	☐ **SCP:** Sponged Copper	☐ **SCA:** Satin Copper	☐
☐ **CSB:** Custom Brass*	☐ **CSP:** Custom Paint*	☐ **CSA:** Custom Aluminum*	☐ **CSS:** Custom SS*

OPTIONS

- ☐ **L211:** 2-11wCLED Uplight
- ☐ **L213:** 2-13wCLED Uplight
- ☐ **L223:** 2-23wCLED Uplight
- ☐ **DIM:** Dimming Ballast
- ☐ **IEM:** Integral Emer.Ballast
- ☐ **TPL:** Top Lens
- ☐ **FUS:** Fusing
- ☐ **DALI:** Dali dimming LED
- ☐ **REM:** Remote Emer. Ballast
- ☐ **WLM:** Wet Location Mounting

Fixture Specifications

SC-78__	~		~		~		~	NR	~		~	
FIXTURE NUMBER (Example: SC-7800)		DIFFUSER (Example: BGA-ECH)		METAL FINISH (Example: ABB)		VOLTAGE ☐ (120V) ☐ (277V) ☐ (347V)		STEM=S+Lgth (Example:S-96") CHAIN=C+Lgth (Example:C-96") NR=Not required		OPTIONS (Example:DIM,IEM)		MODIFICATIONS (Example:Custom Paint*) Use "Notes" Box At Top To Explain Modifications

Lightsmith www.ltsmth.com

Manufacturers of Fine Custom Lighting ~ Ph:434-528-5809 ~ Fx:434-845-7907 ~ Web:Info@Ltsmth.com

©2018 Lightsmith